Kafrelsheikh University Faculty of Engineering Electrical Engineering Department Electrical Power and Machines programme Subject: Protection & Switchgear in Electrical Power Systems		Date: Mon., 10 - 6- 2019 Time Allowed:3 hrs Full Mark: 90 Marks Final term Exam: 2nd Term Year: 4th /2018-2019 Course Code: EPM4226

This course must cover the following ILOs: a.15,b.3,b.6,b.9, c.10 ,c.17, d.1 &d.9

- ***Trust in God ---Be confident ---Be calm***
- ***Exam is not a punishment or a curse.***
- ***It is a chance to show your knowledge***
- ***It is the time to get the prize of your effort***

Important instructions for all students: please read carefully

- ***The examination consists of 4 questions in 2 papers (3 pages)***
- ***Read the questions carefully before answering.***
- ***Your answer should be short and precise.***
- ***Remember to mark your answers with ordered numbers corresponding to questions.***

Answer the Following Question :

Question (1): **(25 Marks)**

a) ***Define*** :

- The C.B and mention their classification based on arc extinction medium.[4]
- Microprocessor based protection scheme. ***Discuss*** its merits and demerits.[6]
- Surge Arrestor .[2]

b) A 60 Hz wave is sampled at 960 Hz, ***find***: Sampling frequency., Sampling interval., Number of samples per cycle and Sampling angle.[8]

c) ***What*** are HRC fuses and ***where*** it is used.[5]

Question (2): **(20 Marks)**

a) ***Discuss*** the different transformer faults. ***What*** are the various protection schemes available for transformers? If you can protect the transformer by the differential scheme ***what*** are the expected problems you may face? Can you overcome these problems? If yes Why? [8]

b) Fig.1 shows a 20 MVA, 33/11 KV, Δ / Y transformer, the neutral earthed Y winding is protected against earth fault by using a restricted earth fault relay. ***Calculate*** the stability resistance if the max through fault level at 11 kV side is 180 MVA, assume the line CT

ratio and the neutral CT ratio is 1200/1 A, the CT resistance is 1 Ω, the wire distance between the CT and REF relay is 100 m, the relay burden is 100 Ω, and the pickup current for the relay is 0.1 A- Note that resistance of wire is 0.005 Ω/km. [12]

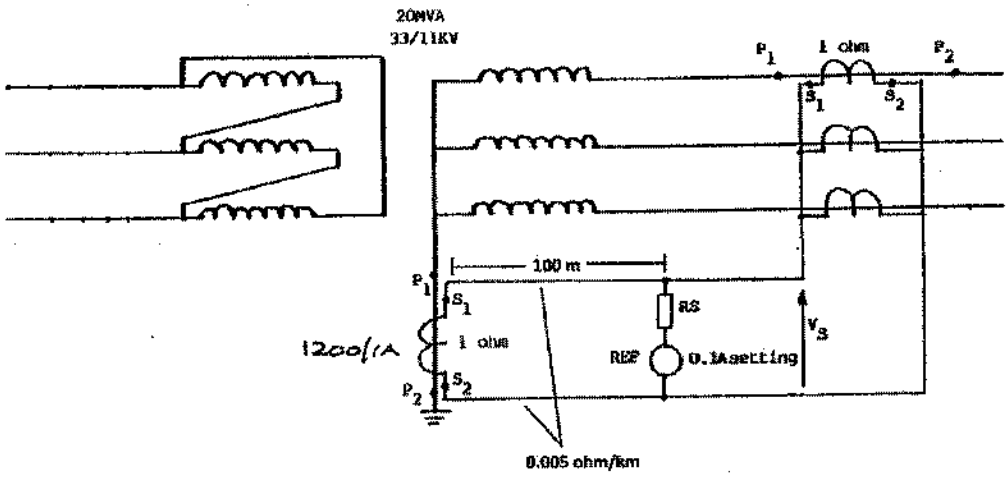

Fig.1

Question (3): **(25 Marks)**

a) ***What*** is important factor of earthing? ***Discuss*** the main advantages of neutral grounding in generators . [8]

b) ***What*** is the importance of Bus-Bar protection and ***does*** the arrangement affect the choice of method of protection. ***What*** is the difference between the differential over current scheme of Bus-Bar and its protection with conventional differential scheme.(Demonstrate your answer with neat sketch). [9]

c) Fig. 2 shows a percentage differential relay applied for the protection of a generator winding. The relay has a 0.1 A minimum pickup and a 10% slope. A high-resistance ground fault has occurred as shown near the grounded-neutral end of the generator winding while it is carrying load with the currents flowing at each end of the generator as shown. Assume that the CT ratios are as shown in the figure and they have no error. ***Will*** the relay operate to trip the generator under this condition? ***Would*** the relay operate if the generator were carrying no load with its breaker open? ***Draw*** the relay operating characteristic.[10]

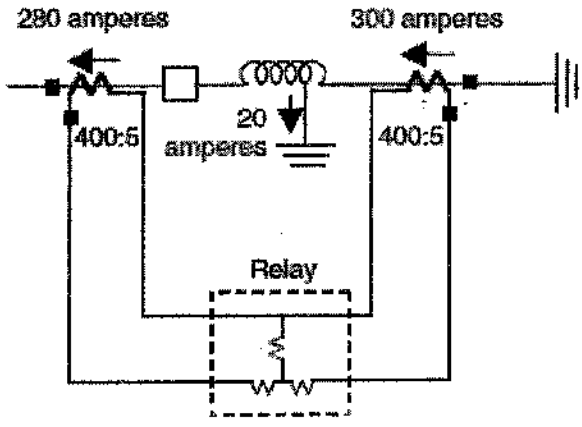

Fig.2

Question (4): **(20 Marks)**

a) ***Sketch*** the curves of various protective relays which protects an induction motor that show the coordination between them , with showing the start up and thermal capability curves.[10]

b) 950 hp, 4.1 KV, cos φ = 0.87, 50 Hz, 3-phase induction motor, the motor starting current at full load condition is equal to 4 In, where In is the motor rated current.

- ***Determine*** the C.T. ratio.[5]
- ***Find*** the over-current and earth fault relays setting.[5]

With my best wishes
Dr.Eman Saad and committee