KAFRELSHEIKH UNIVERSITY
FACULTY OF ENGINEERING
CIVIL ENGINEERING DEP.
YEAR: 3RD YEAR CIVIL
NO. OF PAGES: 3 PAGES

SUBJECT: SOIL MECHANICS (2)

DATE:23/1/2017
TIME ALLOWED: (3) HOURS
FULL MARK: (85) MARKS
FINAL EXAM: 2016/2017
ACADEMIC NUMBER: CES3117

ANSWER AS MUCH AS YOU CAN.
ANY MISSING DATA CAN BE REASONABLY ASSUMED.

QUESTION [1] [20] Mark

A. Using neat sketches, mention the factors affecting the lateral earth pressure and then derive Rankine's equation for active and passive of (C-Ø) soil on a retaining wall of smooth surface.

B. For the gravity retaining wall of smooth surface shown in figure (1), check only the overall stability in both cases:

1) Account for the passive earth pressure
2) Ignore the passive earth pressure

If the wall is unsafe what would be the solution(s) (using neat sketches, no calculation required)

Figure (1

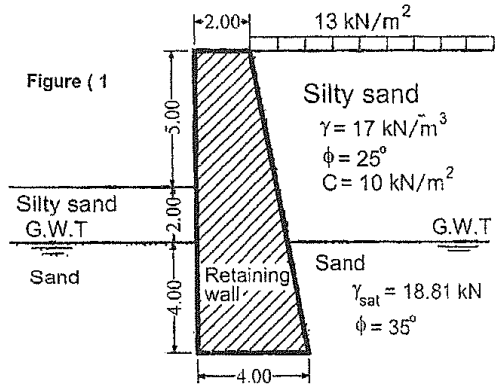

C. Without calculation.

1) Discuss the effect of the position of key to resist the sliding in the following cases :

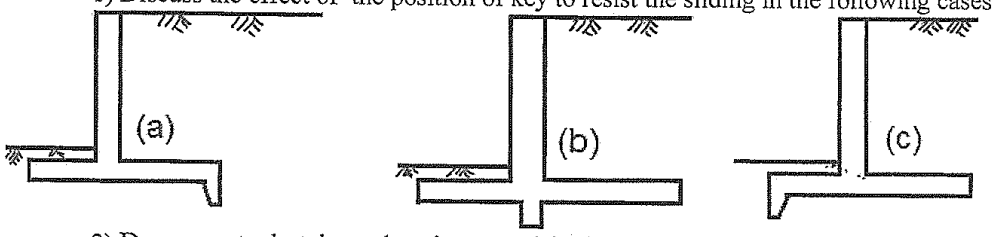

2) Draw neat sketches showing empirical concrete dimension and reinforcement details of following walls

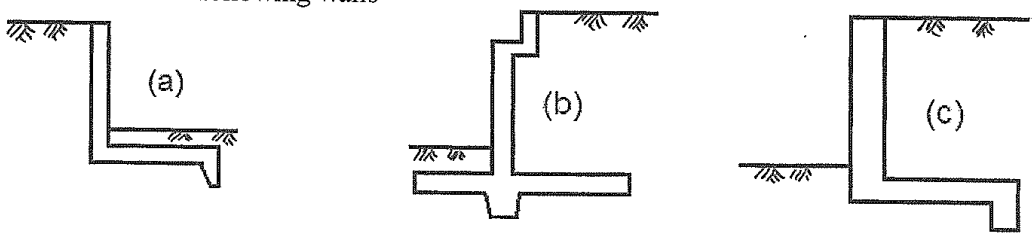

QUESTION [2] [25] Mark

A. Using neat sketches, discuss the effect on the stability of infinite slope in(Ø-soil) due to changing in :

a) Slope height (H)
b) Unit weight (γ) on both cases : (1)Dry case, (2)Submerged case with seepage.

B. Calculate the factor of safety against failure for the shown trial slip circle figure(2). Consider the effect of tension cracks in two cases:

1) When tension cracks are dry
2) When tension cracks are filled by water due to rain
3) Show, using neat sketches, how to increase the safety factor against failure of the slope.

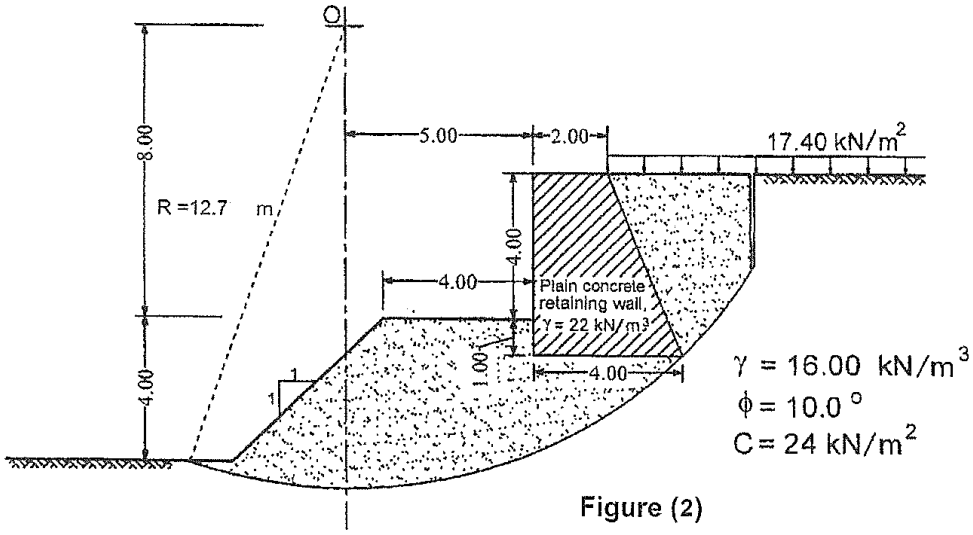

Figure (2)

QUESTION [3] **[20] Mark**

A. choose the correct answer from a,b,c,or d

1) If the failure of a finite slope occurs through the toe, it is known as
   a) face failure
   b) base failure
   c) slope failure
   d) toe failure
2) Pick up the incorrect statement from the following:
   a) Compaction has no effect on the structure of a soil
   b) Permeability decreases with increase in the dry density of a compacted soil
   c) A wet side compacted soil is more compressible than a dry side compacted soil
   d) Dry side compaction soils swell more when given access to moisture
3) When the ground water table depth (D_w) which was originally two times the width (D_w=2B) of the foundation, rises to the natural ground level, the approximate bearing capacity of a shallow foundation constructed on a sandy soil :
   a) Reduces around 50 %
   b) Increases around 50 %
   c) Bearing capacity will be zero and quik sand conditions occur
4) Several parameters are listed below for increasing the load carrying capacity of a coarse-grained soil, which one of the following is more effective than the others:
   a) Increase the width of the foundation
   b) Decrease the depth of the foundation
   c) Increase the depth of the foundation
   d) By raising the ground water table to the natural ground level

B. Using neat sketches, discus the effects of the foundation depth, footing shape and footing width on the bearing capacity