Kafrelsheikh University
Faculty of Engineering
Department of Civil Engineering
3rd year, Design of Steel Structures
Dr. Magdy Israel Salama

Date: 05 – 01 - 2017
Time allowed: (3) hours
Full Mark: 70
Final Exam: 2 pages
Academic Number: CES3010

Notes: - Assume any missing data reasonably.
- Only Egyptian code for steel structures and steel tables are allowed.
- Unless otherwise noted, steel used is St. 37.

1- The truss shown in Fig. (1) is used to cover a hall in Kafrelsheikh city over an area (35x16). The spacing between trusses is 7.0 m. the roof covering is sandwich panels of weight 20 kg/m^2 (inaccessible roof). The own weight of the steel skeleton can be assumed to be 40 kg/m^2. It is required to:

- Draw a general layout of the building (roof plan, main system elevation and side view) showing the arrangement of all bracing systems. Use a scale of 1:200.
- Calculate the loads at each joint of the truss due to dead load, live load and wind load from left to right (live load and wind load are according to Egyptian code requirements).
- Using channel section, design simply supported purlin at joint (*A*).

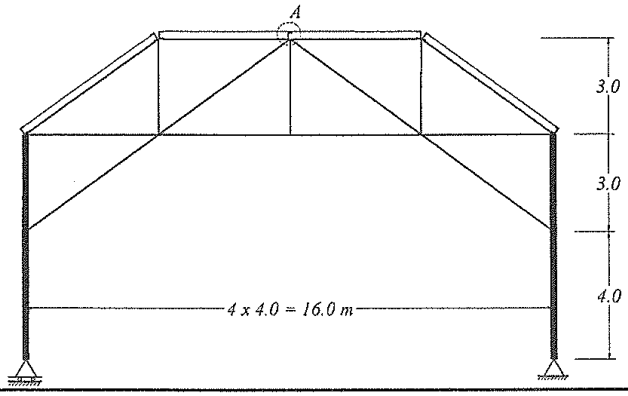

Fig.(1)

(24 Marks)

2- If the forces in the following members (given in the table below) due to different cases of loading, find the design forces for these members.

member	Dead Load	Live Load	Crane Left			Crane Right			Wind Load	
			V	HR	HL	V	HR	HL	Left	Right
a	+20	+15	-8	-3	+3	+6	+4	-4.	-8	+4
b	-25	-30	-9	+2	-2	+5	-4	+4	+6	-3

(6 Marks)

3- Choose a suitable cross section for the following members according to the following data. Assume bolted connection with bolts 16 mm diameter.

member	Force (ton)	Length (m)	shape
1	+15 (case II)	5.50	One angle
2	-25 (case I)	3.00	One angle
3	zero	5.20	Star shape

(12 Marks)

٧٢ ٢ سري

4- Find the maximum tensile and compressive forces (Case II) of a member composed of one angle 150x150x15 if its length L= 6.00 m. (assume bolted construction with bolts 18 mm diameter). [Use steel 44]

(8 Marks)

5- For the connection shown in Fig.(2),

- Design the welded connection between the two truss members and the gusset plate.
- Check the number of bolts in the different groups of bolts (the two groups) which connecting the gusset plate to the column (non-pretensioned bolts 20 mm diameter, grade 4.6) under the given loads.

The gusset plate is 10 mm thickness and the column is H.E.A. No. 300.

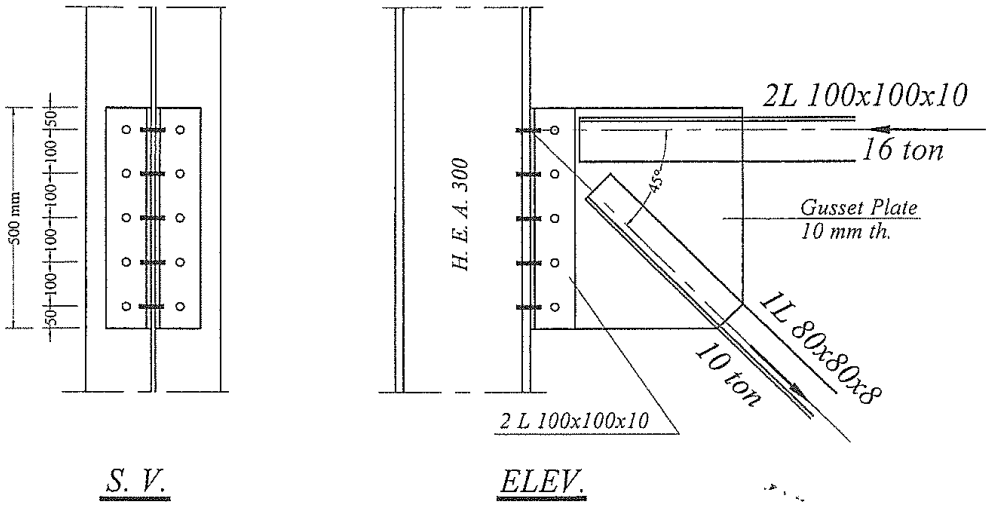

Fig.(2)

(24 Marks)

Best Wishes: Dr. Magdy Israel